Supplemental Information & Instructions
for
386-026 or DMR13914 Ball Joint & Tie Rod Separator
Scissor Type, for all British Cars

This drop forged steel offset lever pattern separator is specially designed to separate ball joints on car steering systems. This design exerts more force that a direct action separator. Suitable for all British cars. Imported from England.

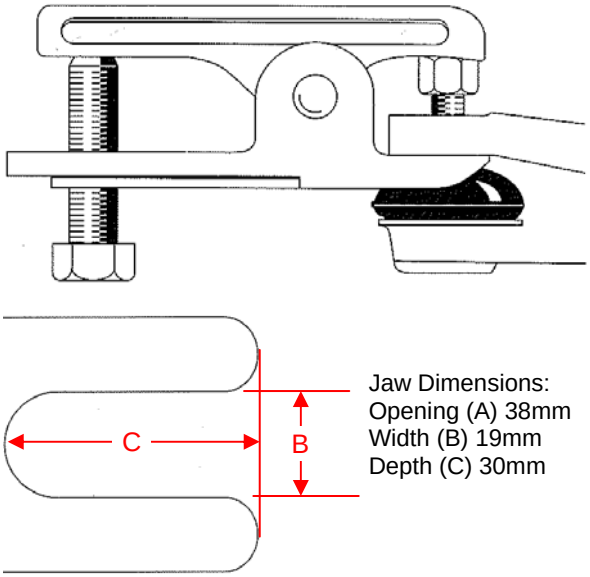

Jaw Dimensions:
Opening (A) 38mm
Width (B) 19mm
Depth (C) 30mm

INSTRUCTIONS FOR USE:
Always wear safety goggles.
Loosen the fixing nut on the ball joint.
Insert the jaws between the ball cup and the steering arm as shown.
Tighten screw firmly with the correct size spanner (wrench) or socket.
Tap centre screw with a soft faced hammer until the joint separates.

*Although every effort has been made to ensure the accuracy and clarity of this information, errors and/or omissions on our part are almost inevitable. Any suggestions that you may have that will improve the information (especially detailed installation notes) are welcome. Please use the simple email form on the **"Contact Us"** page on the Moss website: http://www.mossmotors.com/AboutMoss/ContactUs.aspx*
If you prefer, you may call our Technical Services Department at 805-681-3411. So many people call us for help that we are often not able to answer the calls as fast as we'd like, and you may be asked to leave a message. We apologize in advance for the inconvenience. We will get back to you within 2 business days.

Moss Motors, Ltd.
440 Rutherford Street, Goleta, California 93117
In the US & Canada Toll Free (800) 667-7872 FAX (805) 692-2510 (805) 681-3400
Moss Europe Ltd.
Hampton Farm Industrial Estate, Hampton Road West, Hanworth Middlesex, TW13 6DB
In the UK: 020-8867-2020 FAX:- 020-8867-2030